Current part is item (19) on diagram. Available at www.oshkoshequipment.com

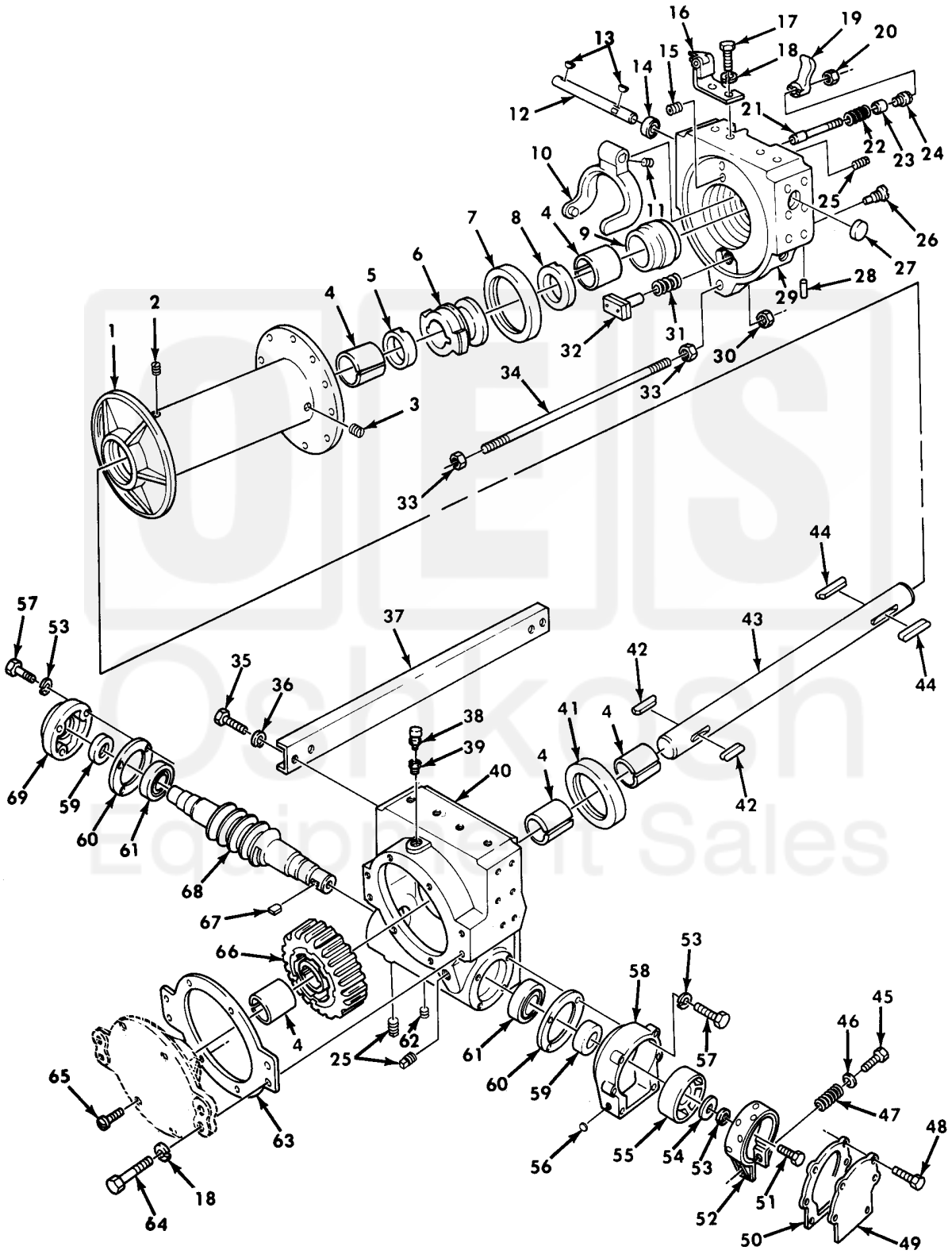

Figure 368. Winch Assembly, Basic, Drum, and Related Parts.

Current part is item (19) on diagram. Available at www.oshkoshequipment.com

Current part is item (19) on diagram. Available at www.oshkoshequipment.com

(1) ITEM NO	(2) SMR CODE	(3) NSN	(4) CAGEC	(5) PART NUMBER	(6) DESCRIPTION AND USABLE ON CODE (UOC)	(7) QTY
					GROUP 2001 HOIST,CRANE,OR WINCH ASSEMBLY	
					FIG. 368 WINCH ASSEMBLY,BASIC,DRUM, AND RELATED PARTS	
1	PAFZZ	2590-00-118-5551	19207	7954477	REEL,CABLE WINCH ASSEMBLY..... UOC:614,620,621,622,623,625,628,633, 634,637	1
2	PAOZZ	5305-00-725-0197	96906	MS51963-172	SETSCREW WINCH DRUM ASSEMBLY..... UOC:614,620,621,622,623,625,628,633, 634,637	1
3	PAOZZ	4730-01-224-4152	81348	WW-P-471ACABCC	PLUG,PIPE..... UOC:614,620,621,622,623,625,628,633, 634,637	1
4	PAFZZ	3120-00-740-9800	19207	7409800	BEARING,SLEEVE..... UOC:614,620,621,622,623,625,628,633, 634,637	5
5	PAFZZ	3120-00-740-9685	19207	7409685	BEARING,WASHER,THRU..... UOC:614,620,621,622,623,625,628,633, 634,637	1
6	PAFZZ	2520-00-740-9814	19207	7409814	CLUTCH HALF,POSITIV..... UOC:614,620,621,622,623,625,628,633, 634,637	1
7	PAFZZ	5330-01-119-5801	19207	10875107-7	SEAL,PLAIN ENCASED..... UOC:614,620,621,622,623,625,628,633, 634,637	1
8	PAFZZ	3120-00-740-9591	19207	7409591	BEARING,WASHER,THRU FRAME THRUST... UOC:614,620,621,622,623,625,628,633, 634,637	1
9	PAFZZ	3130-00-919-2915	19207	7954454	CAP,PILLOW BLOCK..... UOC:614,620,621,622,623,625,628,633, 634,637	1
10	PAFZZ	2520-00-860-7340	19207	7017195	SHIFTER FORK,VEHICU..... UOC:614,620,621,622,623,625,628,633, 634,637	1
11	PAFZZ	5305-00-058-9378	96906	MS51977-50	SETSCREW..... UOC:614,620,621,622,623,625,628,633, 634,637	1
12	PAFZZ	3040-00-745-7685	19207	7017190	SHAFT,STRAIGHT..... UOC:614,620,621,622,623,625,628,633, 634,637	1
13	PAFZZ	5315-00-616-5521	96906	MS35756-13	KEY,WOODRUFF..... UOC:614,620,621,622,623,625,628,633, 634,637	2
14	PAFZZ	5330-00-866-6236	19207	7418774	SEAL,PLAIN ENCASED..... UOC:614,620,621,622,623,625,628,633, 634,637	1
15	PAFZZ	4730-00-042-8988	81348	WW-P-471-ACABUB	PLUG,PIPE..... UOC:614,620,621,622,623,625,628,633, 634,637	1
16	PAFZZ	5340-00-040-2331	19207	8331202	LOCK ASSEMBLY,SHIFT..... UOC:614,620,621,622,623,625,628,633, 634,637	1
17	PAFZZ	5305-00-724-5910	96906	MS90725-162	SCREW,CAP,HEXAGON H LOCK ASSEMBLY.. UOC:614,620,621,622,623,625,628,633, 634,637	2
18	PAFZZ	5310-00-820-6653	96906	MS35338-50	WASHER,LOCK WINCH ASSEMBLY..... UOC:614,620,621,622,623,625,628,633, 634,637	10
19	PAFZZ	2540-00-740-9150	19207	7409150	LATCH,DRUM LOCK WINCH ASSEMBLY..... UOC:614,620,621,622,623,625,628,633, 634,637	1

Current part is item (19) on diagram. Available at www.oshkoshequipment.com